POWER SCRAPER

Model HK0500

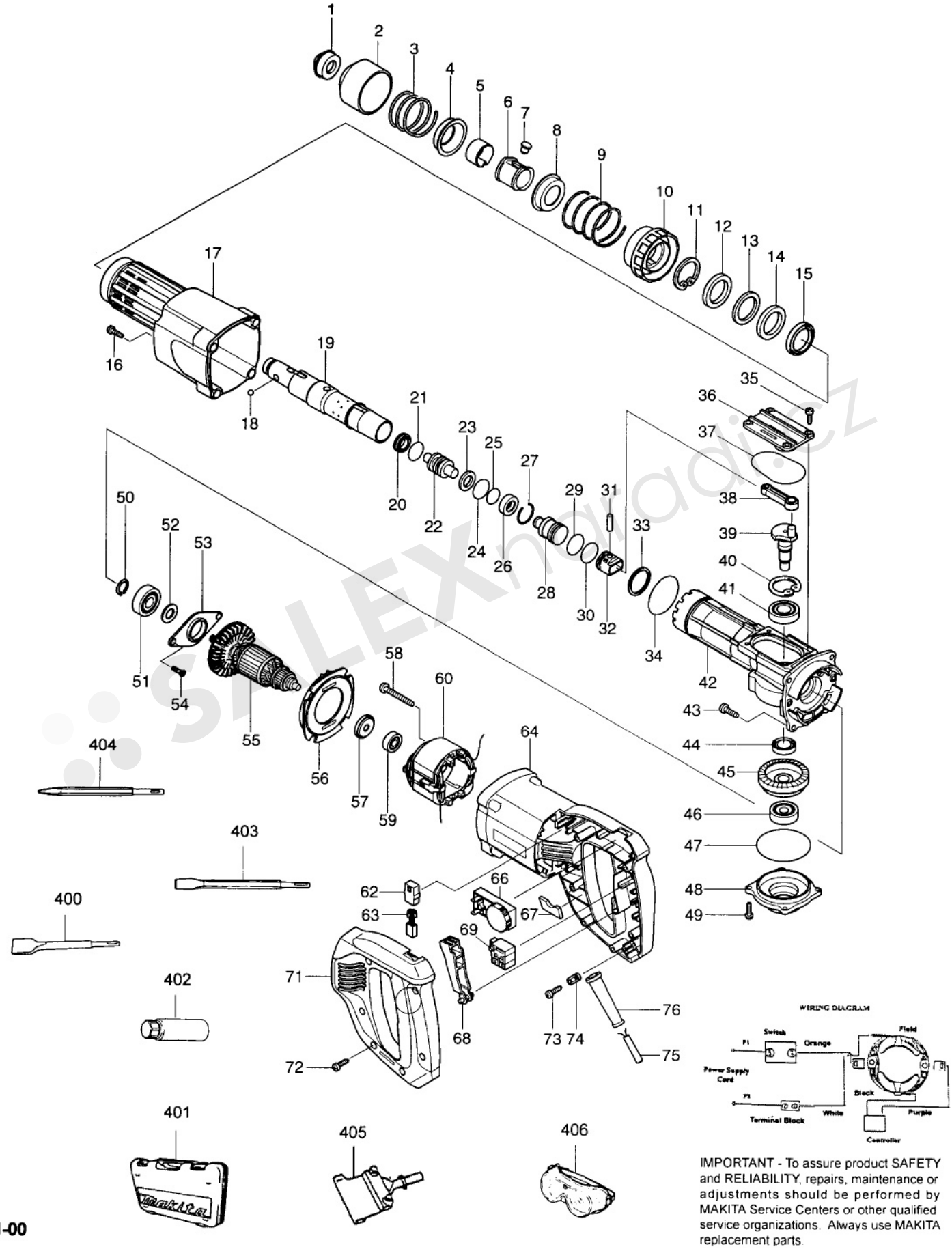

IMPORTANT - To assure product SAFETY and RELIABILITY, repairs, maintenance or adjustments should be performed by MAKITA Service Centers or other qualified service organizations. Always use MAKITA replacement parts.

Fig.	Part No.	Qty. Used	Description
1	286248-0	1	CAP 31
2	416729-2	1	CHUCK COVER
3	233203-3	1	COMPRESSION SPRING 38
4	344691-0	1	SPRING GUIDE
5	232192-9	1	LEAF SPRING 26
6	323724-4	1	CHUCK RING
7	256447-8	1	PIN 8
8	344691-0	1	SPRING GUIDE
9	233238-4	1	COMPRESSION SPRING 38
10	416733-1	1	CHANGE RING
11	962156-6	1	RETAINING RING R-38
12	257218-6	1	RING 27
13	261113-4	1	URETHANE WASHER 28
14	257218-6	1	RING 27
15	213433-2	1	OIL SEAL 30
16	265995-6	2	TAPPING SCREW 4X18
17	416734-9	1	CRANK HOUSING COVER
18	216022-2	1	STEEL BALL 7.0
19	323839-7	1	TOOL HOLDER
20	213173-2	1	X RING 13
21	213214-4	1	O RING 16
22	324012-2	1	IMPACT BOLT
23	267192-0	1	FLAT WASHER 13
24	213175-8	1	O RING 14
25	213117-2	1	O RING 11
26	323846-0	1	O RING CASE
27	231987-7	1	RING SPRING 21
28	323848-6	1	STRIKER
29	213227-5	1	O RING 16
30	213227-5	1	O RING 16
31	256123-4	1	PIN 5
32	416726-8	1	PISTON
33	267129-7	1	FLAT WASHER 27
34	213560-5	1	O RING 44
35	266034-5	1	TAPPING SCREW CT 4X16
36	416732-3	1	CRANK CAP
37	213663-5	1	O RING 55
38	416727-6	1	ROD
39	323826-6	1	CRANK SHAFT
40	962151-6	1	RETAINING RING R-32
41	211232-6	1	BALL BEARING 6002LLU
42	151543-6	1	CRANK HOUSING CPL.
43	266021-4	4	TAPPING SCREW 5X20
44	213219-4	1	OIL SEAL 15
45	226779-7	1	SPIRAL BEVEL GEAR 41
46	211066-7	1	BALL BEARING 6200LLB
47	213663-5	1	O RING 55
48	151579-5	1	GEAR COVER COMPLETE
49	266034-5	4	TAPPING SCREW CT 4X16
50	961052-5	1	RETAINING RING S-12
51	211129-9	1	BALL BEARING 6201DDW
52	253069-5	1	FLAT WASHER 12
53	285690-2	1	BEARING RETAINER 68
54	251304-5	2	+ COUNTERSUNK HEAD SCREW M4X12
55	516356-6	1	ARMATURE ASS'Y 115V
56	416730-7	1	BAFFLE PLATE
57	681644-1	1	INSULATED WASHER
58	266211-9	2	TAPPING SCREW 5X40
59	210005-4	1	BALL BEARING 608DDW
60	594316-8	1	FIELD ASS'Y 115
62	643605-9	2	BRUSH HOLDER
63	191904-8	1	A.C. CARBON BRUSH CB-113
64	416736-5	1	MOTOR HOUSING
66	631290-0	1	CONTROLLER 100-120V
67	423308-9	1	SPONGE SHEET 13-33
68	416728-4	1	SWITCH LEVER
69	651969-7	1	SWITCH
71	151544-4	1	HANDLE COVER COMPLETE
72	265995-6	6	TAPPING SCREW 4X18
73	265995-6	2	TAPPING SCREW 4X18
74	687063-9	1	STRAIN RELIEF
75	664074-1	1	POWER SUPPLY CORD AWG#18-2-5.0
76	682503-2	1	CORD GUARD 8-90
ACCESSORIES			
400	A-30483	1	SCALING CHISEL 38-200
401	824523-2	1	PLASTIC CARRYING CASE
402	181490-7	1	HAMMER GREASE (30 CC)
403	798388-7	1	COLD CHISEL
404	798389-5	1	BULL POINT
405	A-30106	1	SCRAPER
406	191686-2	1	SAFETY GOGGLES